NOTES: UNLESS OTHERWISE SPECIFIED

REV	REVISION DESCRIPTION	BY	APVD	DATE
–	INITIAL RELEASE	RLC		07/13/06

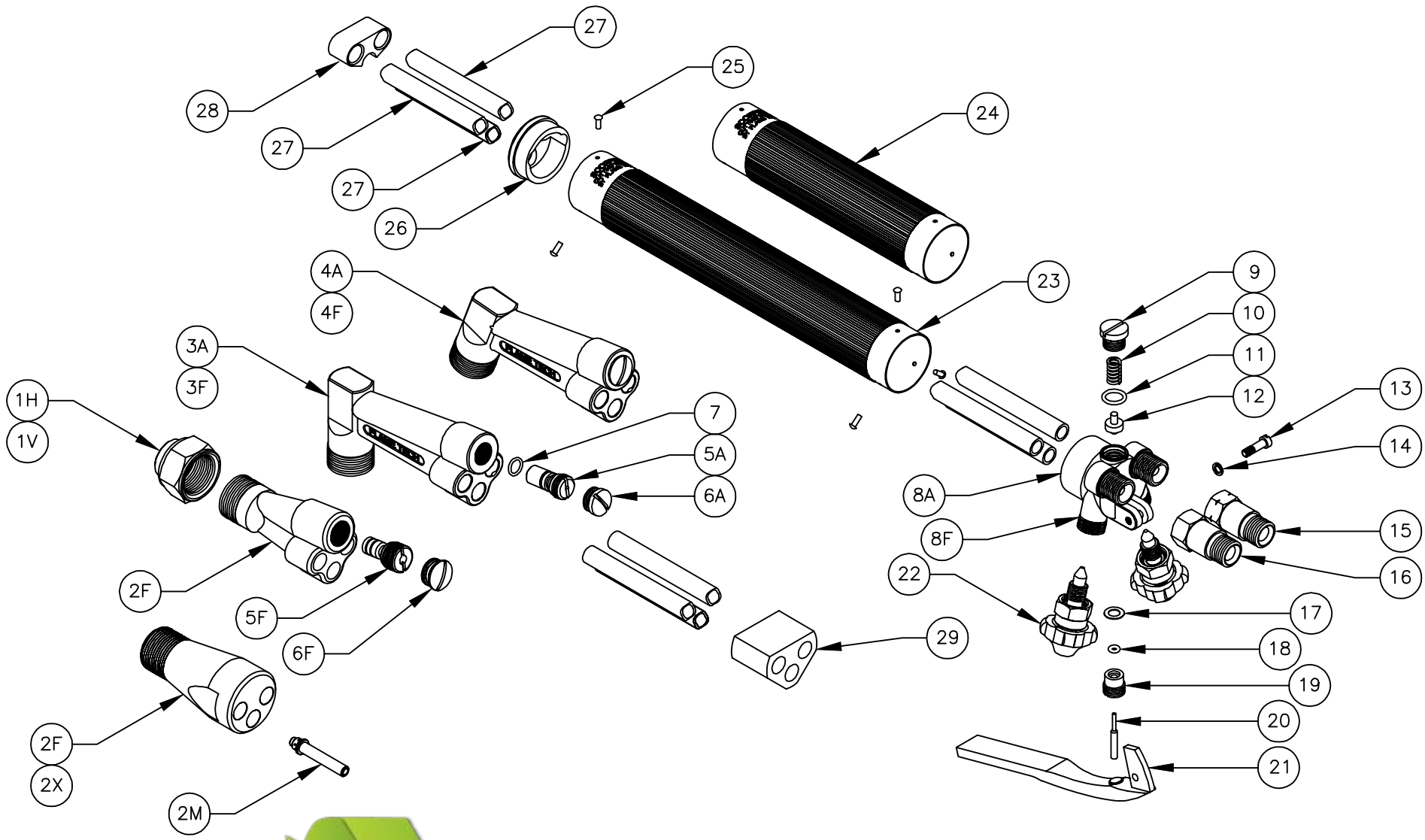

NASCO-OP™
Power of Numbers
800-321-3396

FLAME TECH

DESCRIPTION:
6000 SERIES TORCH ASSEMBLY

NOTES: UNLESS OTHERWISE SPECIFIED

REV	REVISION DESCRIPTION	BY	APVD	DATE
–	INITIAL RELEASE	RLC		07/13/06

ITEM	PART NO	6000 DESCRIPTION	QTY	ITEM	PART NO	6000 DESCRIPTION	QTY
1H	HTN–1	TIP NUT, HARRIS	AR	8A	75100002	TAILBODY, ACETYLENE	AR
1V	VTN	TIP NUT, VICTOR	AR	8F	75100003	TAILBODY, FUEL	AR
2F	71630001	HEAD, 180^, FUEL, HARRIS	AR	9	70700005	SPRING CAP	1
2F	81680015	HEAD, 180^, FUEL, VICTOR	AR	10	73600003	PLUNGER SPRING	1
2X	90955003	HEAD, 180^, FUEL, OXWELD	AR	11	72400010	SPRING CAP O–RING	1
2M	82180002	MIXER, 180^, FUEL, VIC–OXW	AR	12	73700001	PLUNGER VALVE SEAT	1
3A	71630002	HEAD, 90^, ACETYLENE, HARRIS	AR	13	71300002	CO LEVER SCREW	1
3A	71680001	HEAD, 90^, ACETYLENE, VICTOR	AR	14	71300003	CO LEVER LOCK WASHER	1
3A	90955004	HEAD, 90^, ACETYLENE, OXWELD	AR	15	0901–1100	CHECK VALVE, GAS	1
3F	71630003	HEAD, 90^, FUEL, HARRIS	AR	16	0901–1101	CHECK VALVE, OXYGEN	1
3F	71680002	HEAD, 90^, FUEL, VICTOR	AR	17	71300004	PLUNGER GUIDE GASKET	1
3F	90955001	HEAD, 90^, FUEL, OXWELD	AR	18	72400001	PLUNGER O–RING	1
4A	71630004	HEAD, 70^, ACETYLENE, HARRIS	AR	19	75600003	PLUNGER GUIDE	1
4A	71680003	HEAD, 70^, ACETYLENE, VICTOR	AR	20	75600004	PLUNGER	1
4A	90955005	HEAD, 70^, ACETYLENE, OXWELD	AR	21	73500003	CO LEVER	1
4F	71630005	HEAD, 70^, FUEL, HARRIS	AR	22	73200008	VALVE STEM ASSEMBLY	1
4F	71680004	HEAD, 70^, FUEL, VICTOR	AR	23	71500002	HANDLE CASING, 9 INCH	AR
4F	90955002	HEAD, 70^, FUEL, OXWELD	AR	24	71500003	HANDLE CASING, 6 INCH	AR
5A	72100001	MIXER, ACETYLENE	AR	25	71300009	HANDLE CASING DRIVE SCREW	6
5F	72100002	MIXER, FUEL	AR	26	70700006	HANDLE CASING END CAP	1
6A	70700003	MIXER CAP, ACETYLENE	AR	27	93000105	TUBING, 3/8 X .035 SST STEEL	AR
6F	70700004	MIXER CAP, FUEL	AR	28	72800005	TUBING BRACE	AR
7	72400010	MIXER O–RING, ACETYLENE	AR	29	82800003	TUBING SPLICER	AR

NASCO-OP™
Power of Numbers
800-321-3396

FLAME TECH

DESCRIPTION: 6000 SERIES TORCH ASSEMBLY